CombiNorm

Centrifugal pump according to EN 733 (DIN 24255)

JOHNSON PUMP

CombiNorm
Always the right pump!

The CombiNorm is a centrifugal pump according to EN 733 (DIN 24255). This is one of the most versatile pump types. The pump has a wide range of shaft sealing options, varying from gland packing to balanced air-cooled mechanical seal. Standard and heavy duty bearings are available, either grease or oil lubricated. That's why CombiNorm is always the right pump!

CombiNorm represents a range of horizontal centrifugal pumps suited for handling low-viscosity, clean or slightly contaminated liquids. The pump is designed to EN 733 (DIN 24255); however the number of available types is somewhat larger, which provides a wider hydraulic field.

A characteristic of the CombiNorm is the large number of material, shaft seal and bearing system options. The modular design offers maximum interchangeability between the variants. Hence CombiNorm is able to handle most pump duties. If more sophisticated components are required, only the relevant bearing or shaft seal module needs to be replaced with the one having the right specifi cations.

The Back Pull Out design greatly facilitates maintenance of the CombiNorm. Thanks to the similarity between the structural parts, the stock of spare parts can be limited.

CombiNorm

Benefits

- Available in several materials
- Only 4 bearing brackets for the whole range
- Suitable for a wide range of duties
- Mechanical seals according to EN 12756 (DIN 24960)
- Standard type gland packing
- Back Pull Out principle

From know-how to finding solutions

Industry

CombiNorm's ample choice of shaft sealing options and its availability in several materials makes it a very suitable pump for general purposes. Complying to EN 733 (DIN 24255), provided with industrial standard gland packing or mechanical seals according to EN 12756 (DIN 24960): CombiNorm is always the right pump.

Utility

Applications of the CombiNorm within utility buildings are as general duty pumps, circulation pumps in heating systems and pumps in water purification plants.

Agriculture and horticulture

In horticulture the CombiNorm is used as a transport pump for hot water heating systems. Other applications for this pump are in horticulture irrigation sytems as well as in agriculture.

Features and *Benefits*

Hydraulic balancing
- flat cover for hydraulic balancing
- back vanes for hydraulic balancing
- *extended bearing life*

Pump performance
- optimised volute design
- closed impeller
- smooth surfaces
- *high efficiency*
- *minimal internal losses*

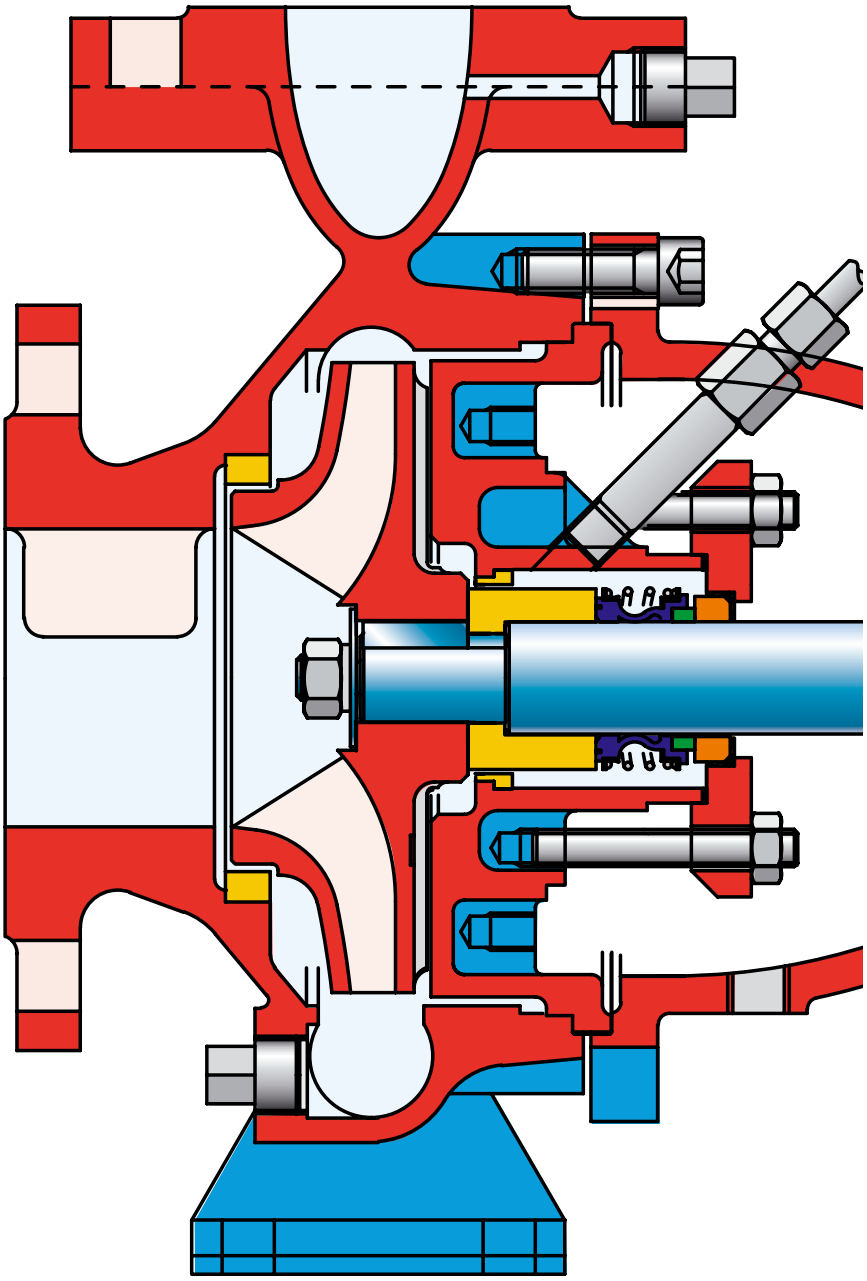

Material options
- available in cast iron, nodular cast iron and bronze
- *suitable for a wide range of applications*

Suction capabilities
- smooth suction entry in pump casing
- smooth surface
- anti rotation vane
- *optimum suction capabilities*
- *minimal flow distortion giving better suction capabilities*

Pump casing
- flanges according to ISO 7005 PN 10
- max. working pressure 10 bar
- large drain opening
- *wide range of applications*
- *complete and fast draining of the casing*

Impeller locking
- impeller nut with spring washer
- *reliable and economic locking*

Foot
- machined foot
- *exact positioning on base and in pipework*

Shaft
- steel alloy shaft
- most seal options with shaft sleeve (extended impeller key ensures co-rotation of the shaft)
- *rigid, reliable shaft*
- *no contact between shaft and pumped liquid when shaft sleeve applied*

Shaft sealing
- 5 possible mechanical EN-seal options
- sealing rings and elastomers in several possible combinations
- sealing cover with quench and flush connections
- 4 possible gland packing options e.g. with cooling cover
- *suitable for many possible applications*
- *suitable for many liquids*
- *also suitable for high temperatures*

Bearings
- bearing lock-up by means of circlips
- rigid cast iron bearing bracket construction
- *large MTBF*
- *economic bearing lock-up*
- *exact alignment*

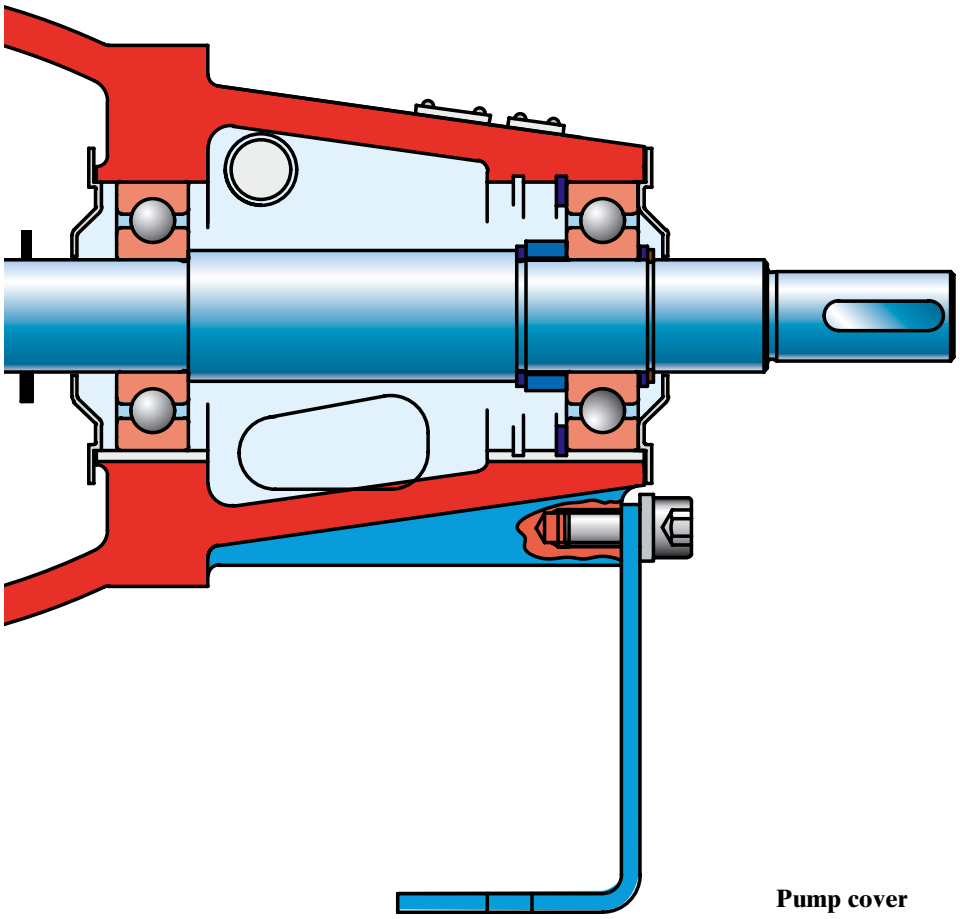

Easy and low cost maintenance
- Back Pull Out principle
- quick and easy impeller replacement
- mechanical seals according to EN 12756 (DIN 24960)
- changeable wear ring
- *easy to disassemble pump cover*
- *shorter down time*
- *economic maintenance*
- *extended pump life*

Pump cover
- flat gasket, fully chambered
- machined fits
- integrated stuffing box/ mechanical seal chamber
- *no gasket blow-out*
- *perfect alignment of all components*

Shaft sealings

CombiNorm is available with the following shaft sealing configurations:

Mechanical seal options:

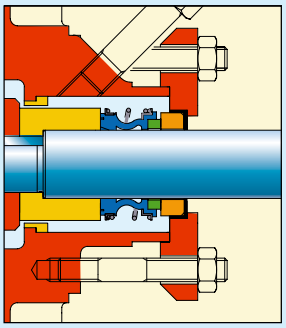

Single mechanical seal, unbalanced

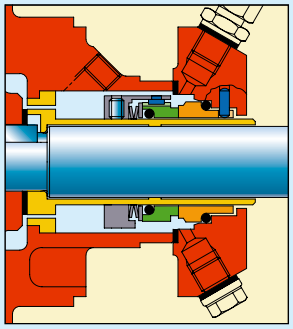

Single mechanical seal, unbalanced, with shaft sleeve

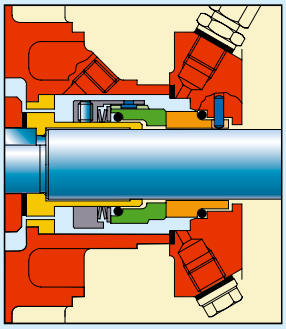

Single mechanical seal, balanced, with shaft sleeve

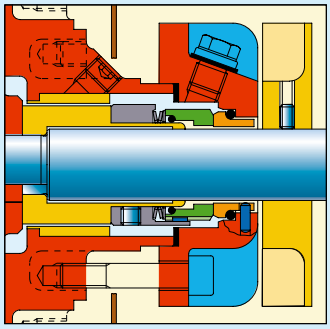

Mechanical seal air-cooled, with shaft sleeve, unbalanced as well as balanced

Gland packing options:

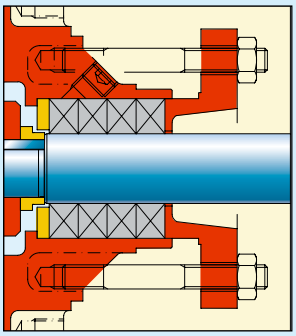

Stuffing box

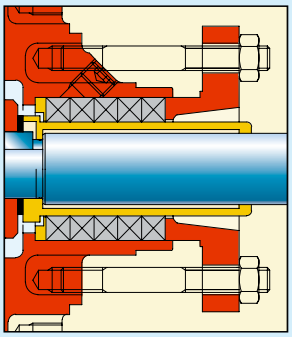

Stuffing box with shaft sleeve

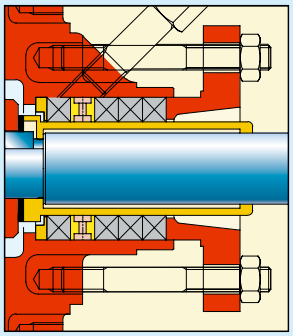

Stuffing box with shaft sleeve and lantern ring

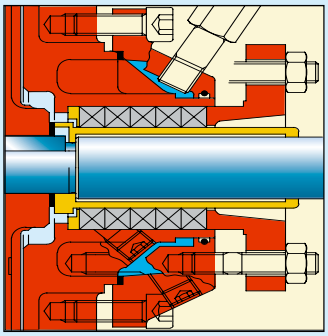

Stuffing box with shaft sleeve and cooling cover

Bearing

The CombiNorm has 2 bearing arrangements:

1. two deep-groove ball bearings
2. a double-row (two single – bearing group 4) angular contact ball bearing in combination with a roller bearing

Both versions can be provided grease lubricated as well as oil lubricated.

Grease lubrication

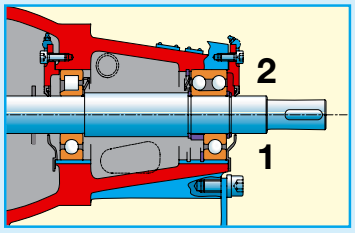

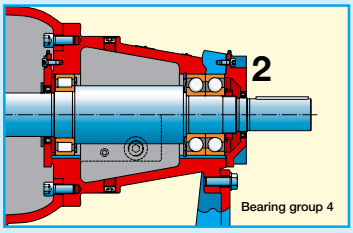

Oil lubrication

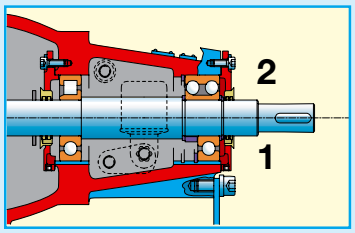

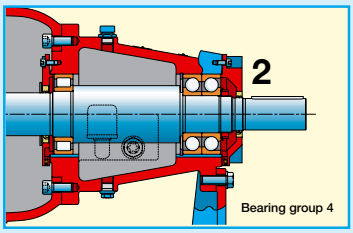

Technical data

Max. capacity	1500 m³/h
Max. head	140 m
Max. working pressure	16 bar
Max. temperature	200 °C
Max. speed	3600 rpm

Hydraulic performance data

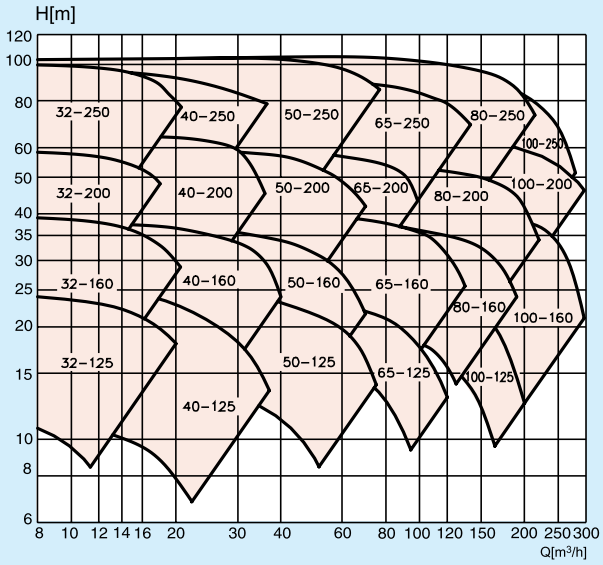

3000 rpm

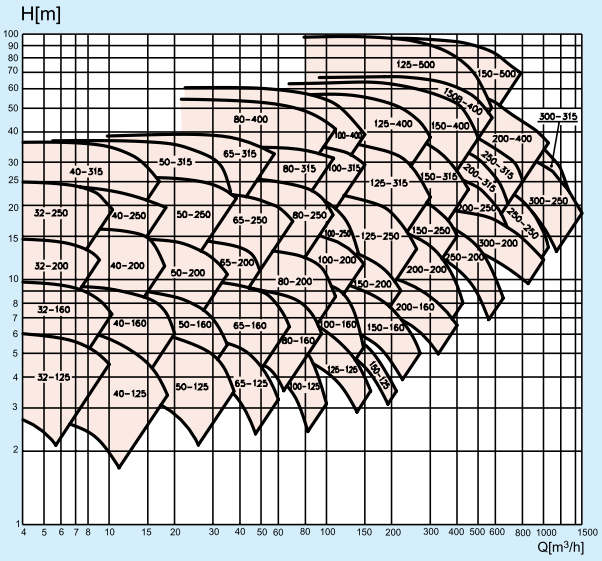

1500 rpm

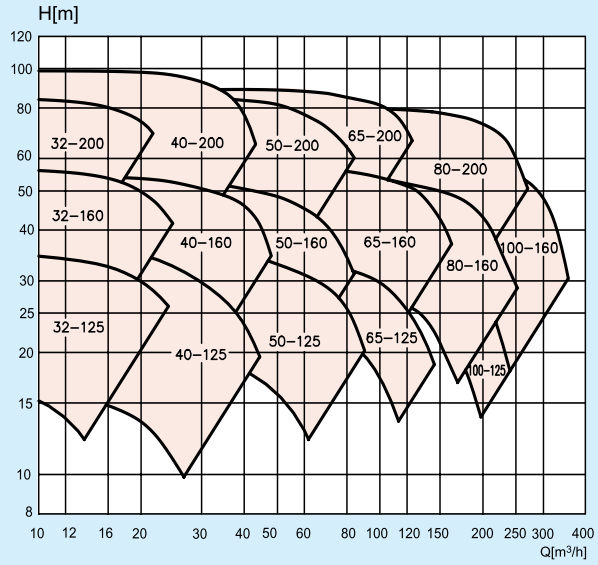

3600 rpm

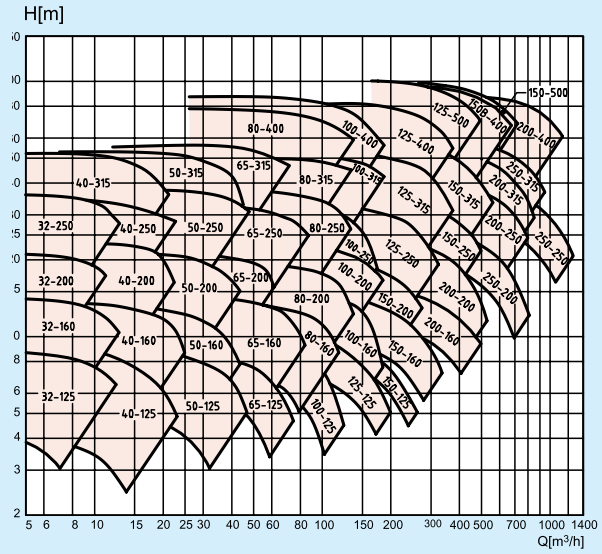

1800 rpm

Subject to alterations

Johnson Pump Group

Parent Company

SWEDEN

Johnson Pump AB
Tel. +46 (0)19 21 83 00
Fax +46 (0)19 27 23 30

National Sales Organisations

AUSTRALIA

Johnson Pump (Australia) Pty. Ltd.
Tel. +61 (0)7 3899 9933
Fax +61 (0)7 3899 8574

BELGIUM

Johnson Pump N.V./S.A.
Belgium:
Tel. +32 (0)2 422 15 50
Fax +32 (0)2 422 15 59

DENMARK

Johnson Pumper A/S
Tel. +45 43 52 24 00
Fax +45 43 52 15 77

FINLAND

Johnson Pump Oy
Tel. +358 (0)9 348 3800
Fax +358 (0)9 348 38495

FRANCE

Johnson Pompes
Tel. +33 (0)1 39 20 50 00
Fax +33 (0)1 39 56 54 22

GERMANY

Johnson Pumpen GmbH
Tel. +49 (0)5731 480 80
Fax +49 (0)5731 414 00

ITALY

Johnson Pump Italiana S.r.l.
Tel. +39 039 604 14 63
Fax +39 039 604 90 97

NETHERLANDS

Johnson Pump B.V.
Tel. +31 (0)592 37 67 67
Fax +31 (0)592 37 67 06

Johnson Pump Horticulture
Tel. +31 (0)174 51 84 10
Fax +31 (0)174 51 84 44

NORWAY

Johnson Pump A/S
Tel. +47 22 74 08 40
Fax +47 22 22 70 30

SPAIN

Johnson Pump España, S.L.
Tel. +34 972 58 08 01
Fax +34 972 58 08 03

Sales Office:
Madrid: Tel. +34 91 888 79 22

SWEDEN

Johnson Pump Svenska
Tel. +46 (0)19 21 83 70
Fax +46 (0)19 27 23 18

SWITZERLAND

Johnson Pumpen AG
Tel. +41 (0)43 477 71 22
Fax +41 (0)43 477 71 20

UNITED KINGDOM

JP Pumps Ltd.
Tel. +44 (0)1293 55 34 95
Fax +44 (0)1293 52 46 35

Northern Regional Office:
Bradford: Tel. +44 (0)1274 74 22 47
Fax +44 (0)1274 74 22 28

Business Units

BELGIUM

Johnson Pump Brussels N.V.
Tel. +32 (0)53 60 27 15
Fax +32 (0)53 60 27 01

INDIA

Johnson Pump (India) Ltd.
Tel. +91 (0)79 2287 03 11
Fax +91 (0)79 2287 25 22

NETHERLANDS

Johnson Pump Water B.V.
Tel. +31 (0)592 37 67 67
Fax +31 (0)592 37 67 60

SWEDEN

Johnson Pump
Tel. +46 (0)19 21 83 00
Fax +46 (0)19 27 23 72

USA

Johnson Pumps of America, Inc.
Tel. +1 847 671 7867
Fax +1 847 671 7909

In addition to our own companies we are represented by independent distributors in over 40 countries worldwide.

www.johnson-pump.com

JOHNSON PUMP

Johnson Pump Water B.V.

Dr. A.F. Philipsweg 51 - P.O. Box 9 - 9400 AA Assen - Tel 0592-37 67 67 - Fax 0592-37 67 60 - E-mail : export.nl@johnson-pump.com

ISO 9001

CN-003 Water GB (06•2005) br